bouncepad™
engaging tablet solutions

Data sheet : Bouncepad Flip (Android)

The Bouncepad Flip sits elegantly and securely on your counter top. Its weighted triangular base and smooth flipping motion make sharing the screen between sales person and customer a joyful operation.

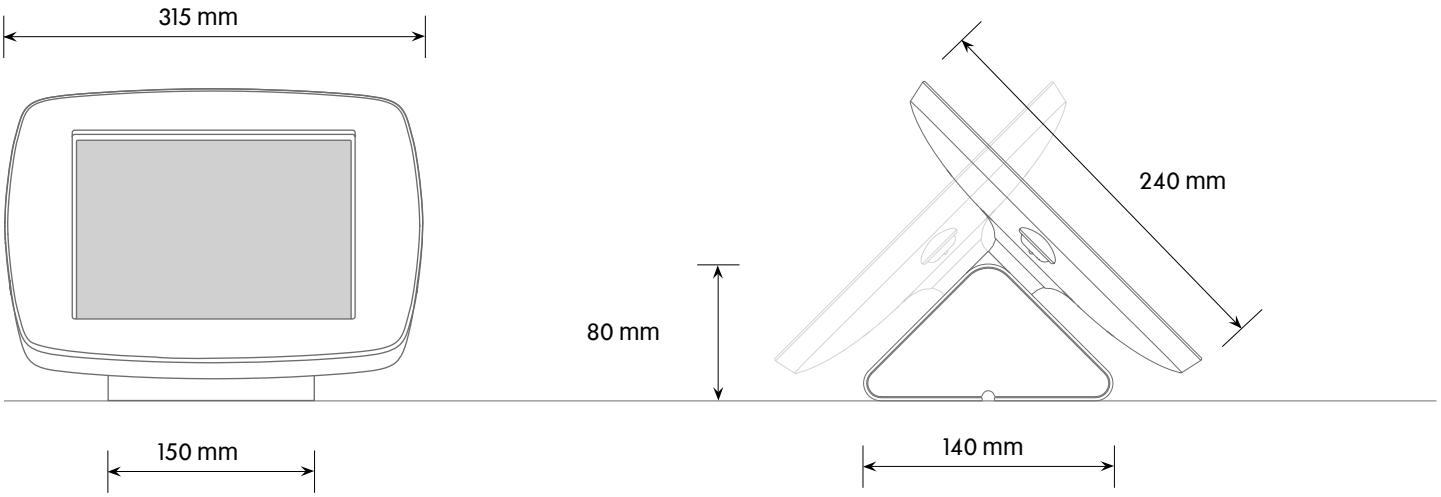

Mounting Options

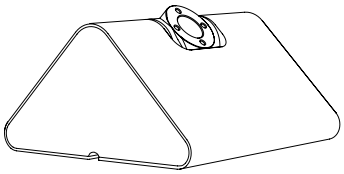

Position triangle onto surface

...

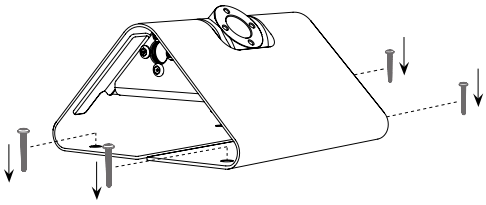

Secure triangle onto surface

Use screws suitable to your floor surface to secure the triangle base to the floor.

Materials

Tablet case	PC/ABS
Faceplate	stainless steel (powdercoated)
Mounting triangle	steel
Internal plate	aluminium

Configuration Options

Colour	white / black
Faceplate	covered front camera open front camera open front camera/open menu buttons (Tab 3 only)
Tablet models	Samsung Galaxy tab 1, 2 & 3 10.1, Motorola Xoom 1 & 2
Cable	not provided

Bouncepad UK, Unit 3, Imperial Works, Perren Street, London, NW5 3ED, United Kingdom
+44 (0) 20 3693 0000 I hello@bouncepad.com I www.bouncepad.com