Data sheet : Bouncepad Flex

bouncepad™
engaging tablet solutions

The Bouncepad Flex gives you the freedom to move the screen to any position and once released, your Bouncepad stays put. You can also easily twist the screen between landscape and portrait orientation.

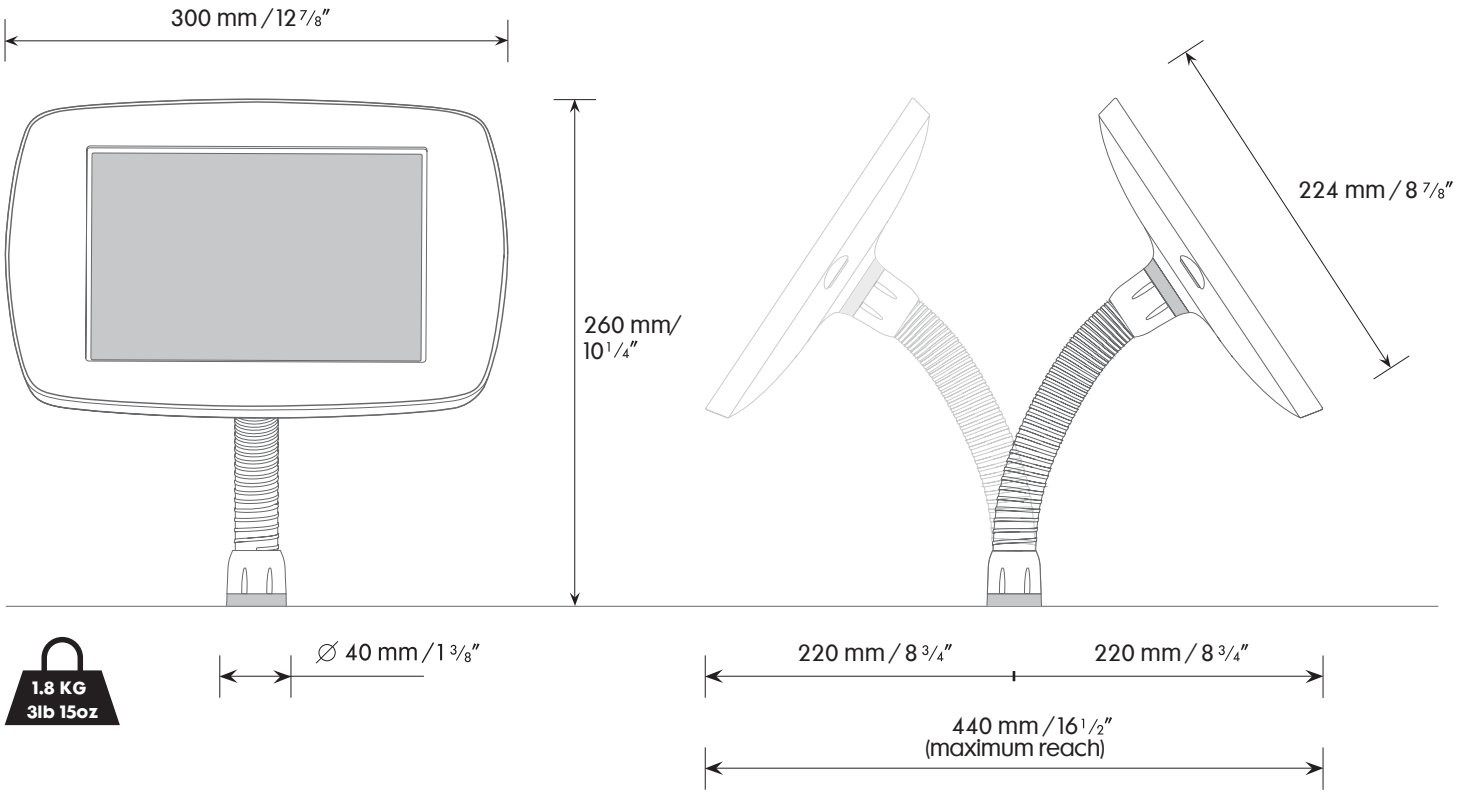

Mounting Options

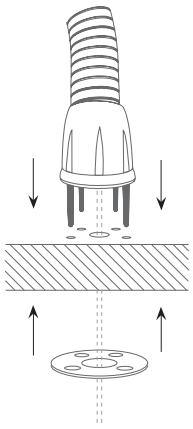

Mount from below surface
Not suitable for surfaces thicker than 35 mm / 1 3/8"

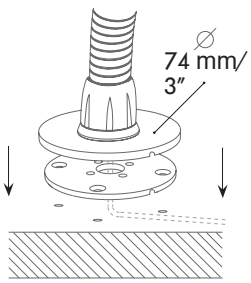

Mount from above surface
Suitable for all thicknesses.

Materials

Tablet case	PC/ABS
Faceplate	Stainless steel (powdercoated)
Mounting arm	Brass and Aluminium Lacquered
Mounting plate	Aluminium

Configuration Options

Colour	White / Black/Custom
Feature access	Covered home button / Covered front camera Covered home button / Exposed front camera Exposed home button / Covered front camera Exposed home button / Exposed front camera
Tablet models	iPad 2 / iPad 3 / iPad with Retina Display / iPad Air
Cable	Not provided

UK +44 (0) 20 3693 0000 hello@bouncepad.com | **USA** 1-888-423-3885 hi@bouncepad.com | **DE** +49 (0) 30 6098 5170 hallo@bouncepad.com
© 2014 Bouncepad Spotspot Ltd. All rights reserved.